HYPERION ATLAS - PROGRAMMABLE DIGITAL SERVOS

Hyperion Part Number >>>	DS11-SCB	DS11-GCB	DS11-AMB	HP-DS12ACP	HP-DS12HCP	HP-DS12GCP	HP-DS13ACB	HP-DS13TCB	HP-DS13TMB
Weight	10.0g	10.3g	10.5g	16.9g	17.3g		17.9g		19.2g
Speed sec/60 deg 4.8v/6.0	0.15/0.13	0.06/0.05	0.18/0.15	0.16/0.13	0.13/0.10	0.08/0.06	0.16/0.13	0.20/0.16	0.20/0.16
Dynamic torque Kg/cm 4.8/6.0v	1.7/2.0	0.8/1.0	2.1/2.5	2.6/3.2	1.7/2.0	1.3/1.8	2.6/3.2	3.6/4.2	3.6/4.2
Holding torque Kg/cm 4.8v/6.0v	3.4/4.0	1.6/2.0	4.2/5.0	5.2/6.4	3.4/4.0	2.6/3.2	5.2/6.4	7.2/8.4	7.2/8.4
Dimensions mm	23.5x11.5x21.0			29.5 x 12 x 26			29.5 x 13 x 27.6		
Gear Train Primary Material	Carbonpoly		Light Metal	CarbonPoly			CarbonPoly		Metal
Bearing	top ball			Plain			top ball		
Required Pulse	2.5 ~ 5 Volt Peak to Peak Square Wave								
Operating Temp	-20 to +60 Degree C								
Current Drain (4.8V)	6.0mA/idle, 130mA noload			6.0mA/idle, 150mA noload		6.0mA / 170mA	6.0mA/idle, 150mA noload operating		
Current Drain (6.0V)	6.0mA/idle, 140mA noload			6.0mA/idle, 170mA noload		6.0mA / 200mA	6.0mA/idle, 170mA noload operating		
Stall Current (4.8V)	400mA			680mA		750mA	680mA		
Stall Current (6.0V)	450mA			800mA		900mA	800mA		
Minimum Input Voltage	3.5V under load								
Maximum Input Voltage	Unloaded input voltage should never exceed 7.8V, loaded input voltage max 6.25V								
Drive	Direct DIGITAL								
Connector Wire Gauge	27AWG			25AWG			25AWG		
Connector Wire Strand Count	20EA			30EA			30EA		
PROGRAMMABLE PARAMETERS via PC with HP-AT-PRGUSB 3pin Adapter ($17.95)									
Rotation in Degrees	Adjustable 30 to 140 degrees total min/max (i.e. 15 to 70 degrees each way), 90 degree default (45 each way)								
Reverse	Clockwise/CounterClockwise, Clockwise default								
Speed	1% to 100% of Rated Speed (100% default)								
Servo Center	+/- 127uS (0 default, center at 1500uS)								
DeadBand Width	0 uS to 16 uS (2 uS default)								
Compatibility	Programmer allows selection of common Transmitter brands, to insure compatibility and default centering								

Normal Torque and Speed	**A**
HighTorque/Speed Blend, Mod Current	**F**
High Torque/Less Speed	**T**
UltraHigh Torque/Low Speed	**U**
Very High Speed/Low Currrent	**H**
High Speed/Med Torque/Low Current	**S**
UltraHigh Speed for Heli Gyro	**G**
Carbon (or Carbon/Metal) Gears	**C**
Metal Gear	**M**
Plain Bearings	**P**
Top Ball Bearing	**B**
Twin Ball Bearing	**D**

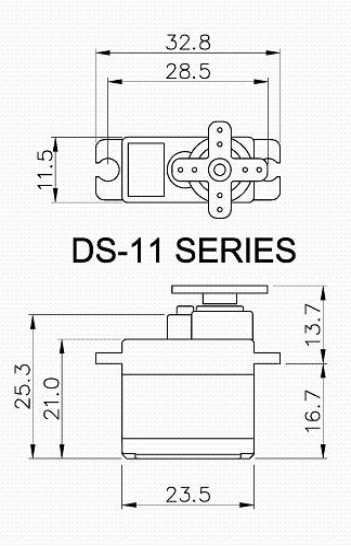

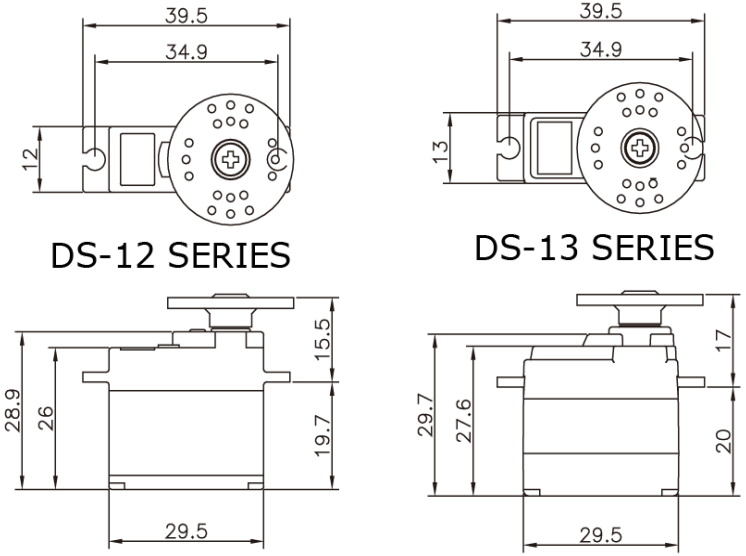

Rights Reserved, Hyperion HK Ltd, Nov 25 2007