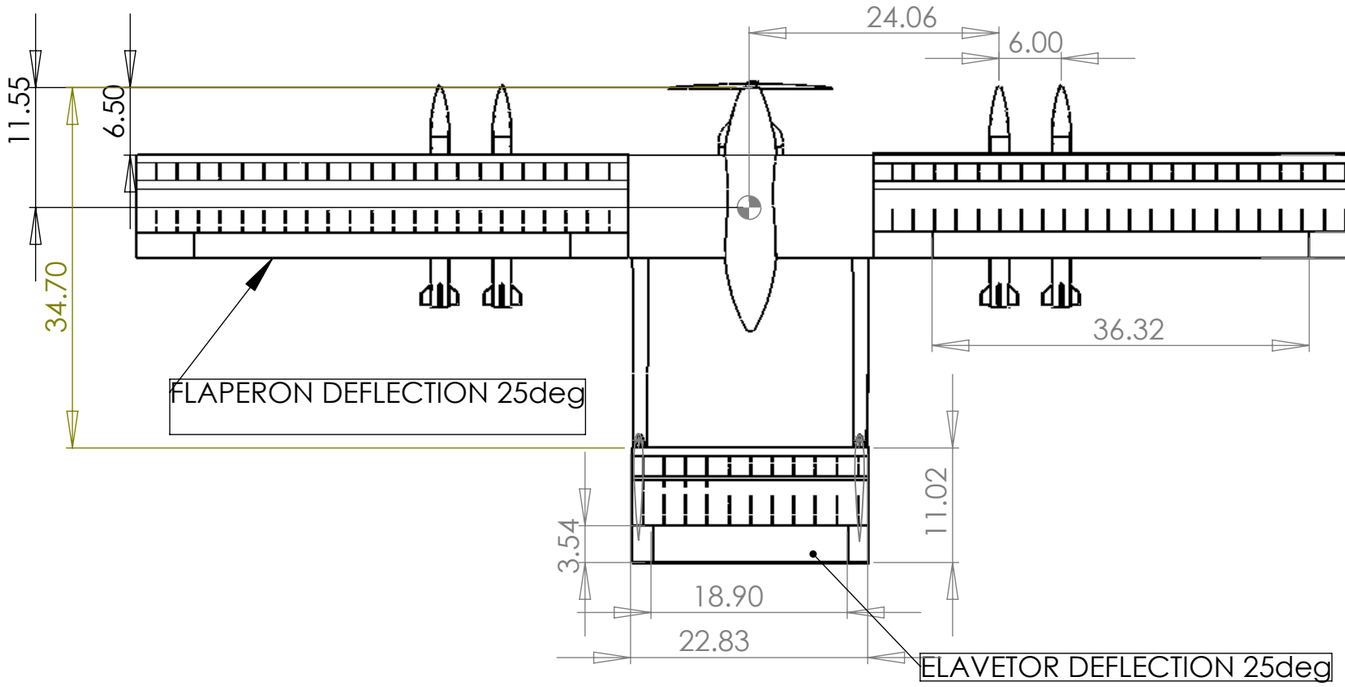

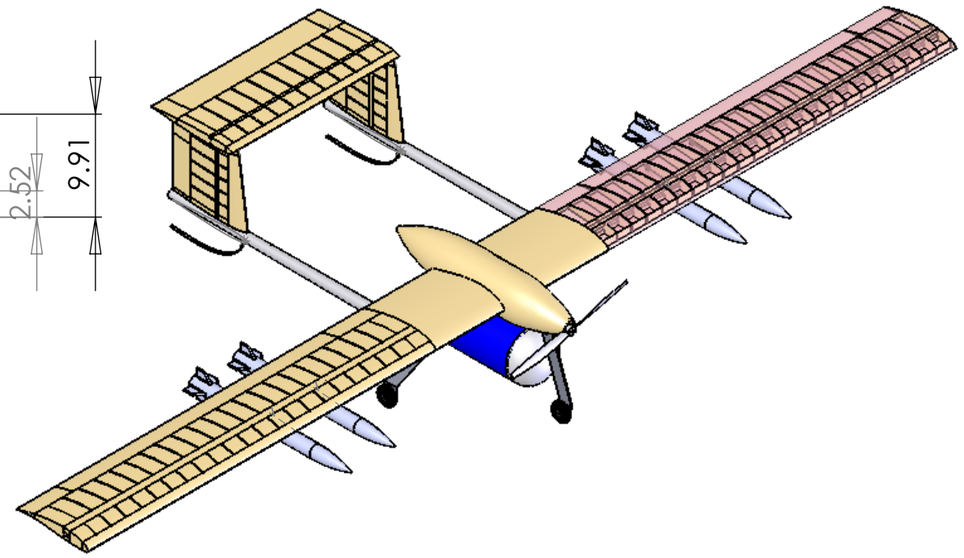

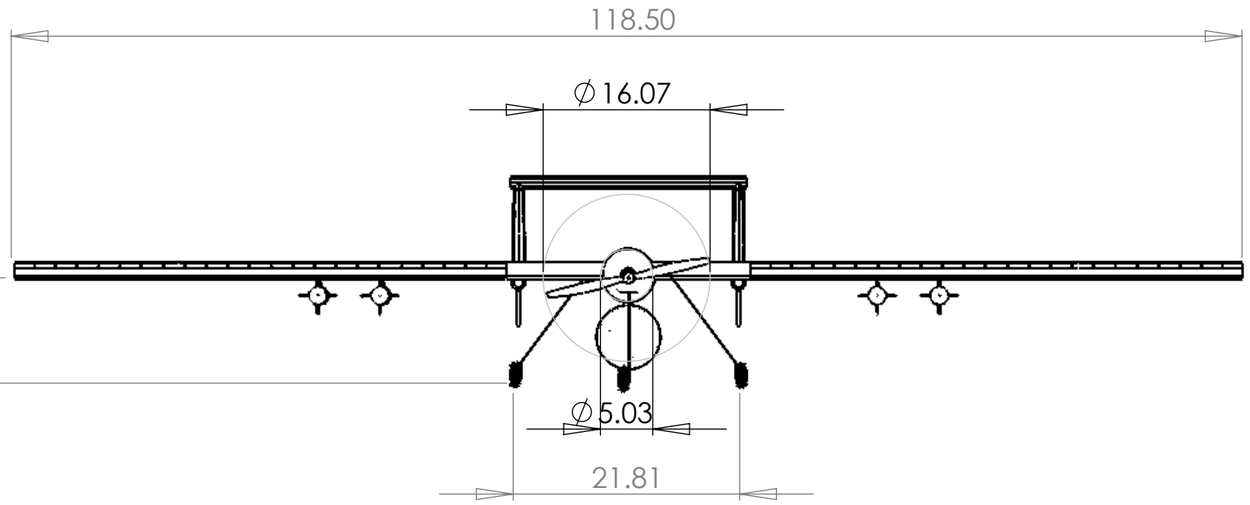

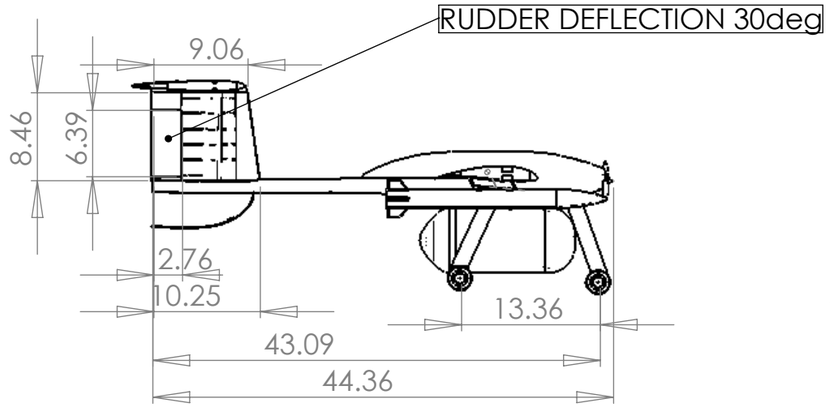

DRAWN	A. SALOMON
CHK'D	V. KATZ
ENG.APPR	S. TZACH

PROJECT TITLE

TECH-AWAY

NOTE: ALL DIMENTIONS ARE GIVEN IN INCHES

TECHNION - ISRAEL INSTITUTE OF TECHNOLOGY
CESSNA-RAYTHEON DESIGN/BUILD/FLY 2009

AIRCRAFT 3-VIEW

A3

SCALE:1:50

SHEET 1 OF 1